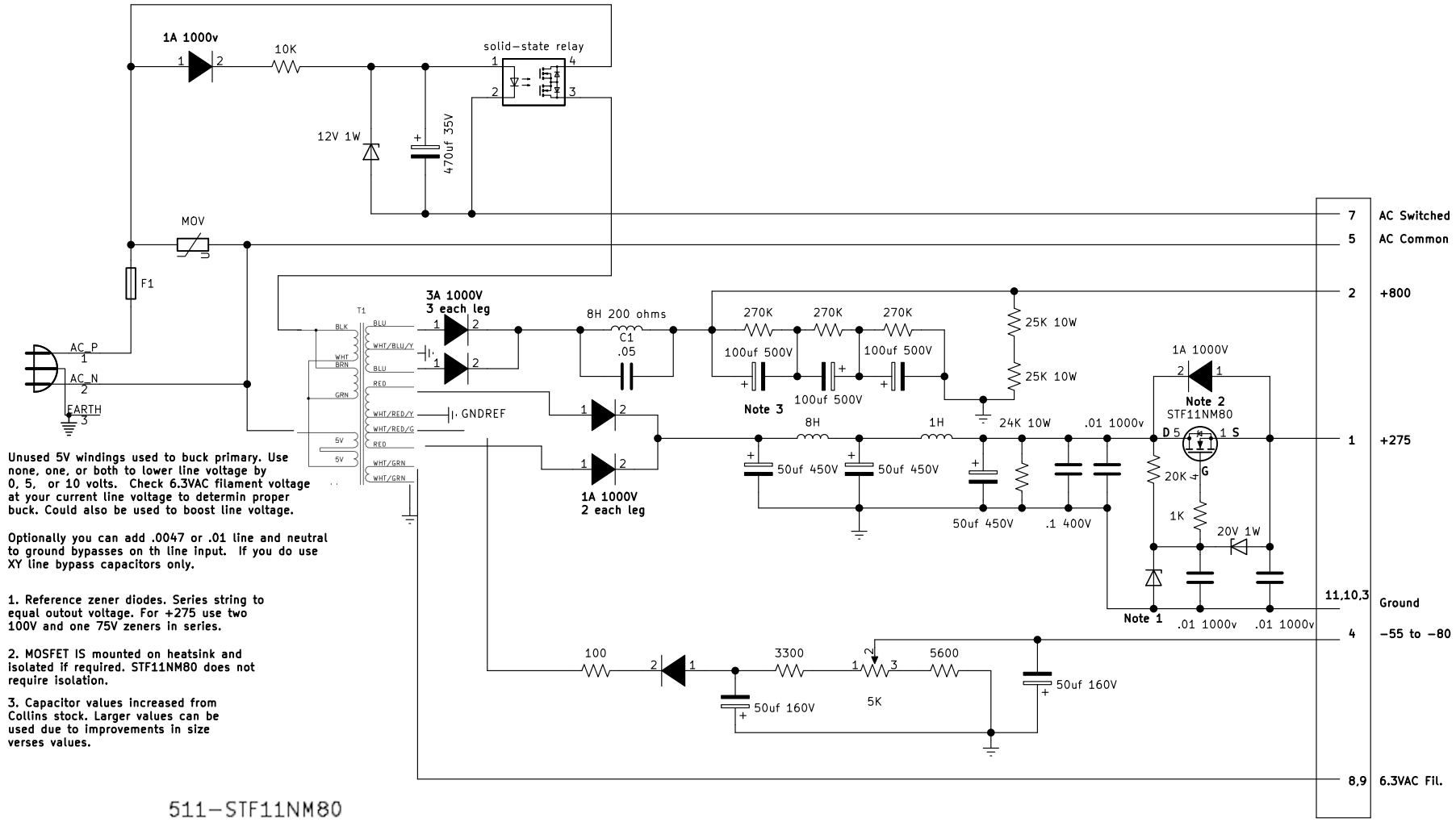

Unused 5V windings used to buck primary. Use none, one, or both to lower line voltage by 0, 5, or 10 volts. Check 6.3VAC filament voltage at your current line voltage to determin proper buck. Could also be used to boost line voltage.

Optionally you can add .0047 or .01 line and neutral to ground bypasses on th line input. If you do use XY line bypass capacitors only.

1. Reference zener diodes. Series string to equal outout voltage. For +275 use two 100V and one 75V zeners in series.

2. MOSFET IS mounted on heatsink and isolated if required. STF11NM80 does not require isolation.

3. Capacitor values increased from Collins stock. Larger values can be used due to improvements in size verses values.

511-STF11NM80

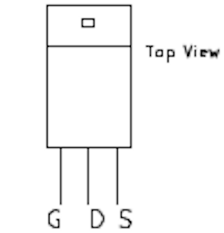

Doug Crompton, WA3DSP

Sheet: /
File: 516F2.sch

Title: 516F-2 Updated Schematic

Size: USLetter	Date:	Rev:
KiCad E.D.A. eeschema 5.1.5+dfsg1-2build2		Id: 1/1